SAFEMASTER
Interface Module
HK 3087N

0273025

Product Description

The interface module HK 3087N has forcibly guided contacts. Therefore it can be used to safely separate control and load circuits as well as to reinforce contacts of safety devices.
The interface module has a strong isolation between monitoring and load contact and is designed for high thermal current.

Circuit Diagram

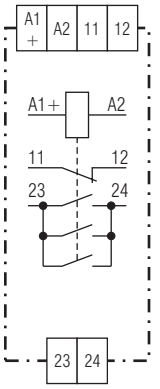

M11283_a

HK 3087N.16

Connection Terminals

Terminal designation	Signal designation
A1+	+ 24 V DC Coil
A2	GND Coil
11, 12	Forcibly guided indicator contact
23, 24	Forcibly guided load contact

Your Advantages

- Simple contact extension and re-inforcement also of safety modules
- Cost and space saving alternative compared to contactors
- Simple contact monitoring via forcibly guided NC contact
- large wire cross section 0.5 - 6 mm² (10 - 24 AWG) reduces thermal load on wires

Features

- According to IEC/EN 61810-1, IEC 60664-1,
- With forcibly guided contacts according to IEC 61810-3
- Models with soldered in PCB safety relay
- With polarity protected diode
- Optionally with free-wheeling diode across relay coil
- With LED indicator
- Optionally AgNi + 0,2 µm Au or AgNi + 5 µm Au
- For DIN rail mounting according IEC/EN 60715
- Clearance and creepage distance between NC and NO contact > 10 mm
- Width 22,5 mm

Approvals and Markings

CE

Applications

- Interfacing between control and load circuits
- Contact extension and re-inforcement
- Separate switching of several current circuits, e. g. at
  - Machines and plants,
  - Energy production and transport

Indicator

green LED:	on, when supply connected

Technical Data

Input

Nominal voltage U_N:	DC 24 V (andere auf Anfrage)
Voltage range:	0,8 ... 1,2 U_N
Nominal consumption:	1,0 W

Output

Contacts		
HK 3087.16, OA 5602.48:	1 NO and 1 NC contact	
Contact material:	$AgSnO_2$ + 0,2 µmAu other on request	
Contact type:	spring contact	
Operate time:	max. 20 ms	
Release time:	max. 39 ms	
Nominal output voltage:	AC 250 V	
Thermal current I_{th}		
NO contact:	25 A	
NC contact:	5 A	
Switching capacity		
to AC 15		
NO contact:	5 A / AC 230 V	IEC/EN 60 947-5-1
NC contact:	2 A / AC 230 V	IEC/EN 60 947-5-1
to DC 13		
NO contact:	4 A / DC 24 V	IEC/EN 60 947-5-1
NC contact:	2 A / DC 24 V	IEC/EN 60 947-5-1

All technical data in this list relate to the state at the moment of edition. We reserve the right for technical improvements and changes at any time.

Technical Data

Electrical life		
NO contact		
to AC 15 at 1 A, AC 230 V:	1.5 x 10^6 switch. cycl.	IEC/EN 60 947-5-1
to AC 15 at 0.5 A, AC 230 V:	2.5 x 10^6 switch. cycl.	IEC/EN 60 947-5-1
NC contact		
to AC 15 at 1 A, AC 230 V:	1 x 10^6 switch. cycl.	IEC/EN 60 947-5-1
to DC 13 at 1 A, DC 24 V:	0.5 x 10^6 switch. cycl.	IEC/EN 60 947-5-1
Short circuit strength max. fuse rating		
NO contact:	32 A gL	IEC/EN 60 947-5-1
NC contact	6 A gL	IEC/EN 60 947-5-1
Mechanical life:	≥ 50 x 10^6 switching cycles	

General Data

Operating mode:	Continuous operation	
Temperature range:	- 40 ... + 55°C	
Clearance and creepage distances		
between NC contact, auxiliary voltage and NO contact:	> 10 mm	
rated impulse voltage / pollution degree:	6 kV / 2	IEC 60 664-1
Clearance and creepage distances		
between auxiliary voltage and NC contact:	> 3 mm	
rated impulse voltage / pollution degree:	4 kV / 2	IEC 60 664-1
EMC		
Electrostatic discharge:	8 kV (air)	IEC/EN 61 000-4-2
HF irradiation:	10 V / m	IEC/EN 61 000-4-3
Fast transient:	4 kV	IEC/EN 61 000-4-4
Surge voltages between		
wires for power supply:	1 kV	IEC/EN 61 000-4-5
between wire and ground:	2 kV	IEC/EN 61 000-4-5
HF-wire guided:	10 V	IEC/EN 61 000-4-6
Interference suppression:	Limit value class B	EN 55 011
Degree of protection		
Housing:	IP 40	IEC/EN 60 529
Terminals:	IP 20	IEC/EN 60 529
Housing:	Thermoplastic	
Vibration resistance:	Amplitude 0.35 mm Frequency 10 ... 55 Hz,	IEC/EN 60 068-2-6
Climate resistance:	Humid heat	IEC/EN 60 068-2-30
Terminal designation:	EN 50 005	

Leiteranschluß:

NC contact auxiliary voltage	NO contact
0.5 ... 2.5 mm^2 solid	0,5 ... 6 mm^2 solid
0.5 ... 2.5 mm^2 flexible	0,5 ... 4 mm^2 flexible

Wire connection:	Cable wedging according to the elevator principle with captive plus-minus-terminal screws	
Mounting:	DIN rail	IEC/EN 60 715
Weight:	approx. 130 g	

Dimensions

Width x height x depth:	22.5 x 106 x 75 mm

Standard Type

HK 3087N.16 DC 24 V

Article number: 0066629

- 1 NO contact , 1 NC contact
- Contact material $AgSnO_2$ + 0.2 µm Au
- Width: 22.5 mm

Ordering Example

HK 3087N. 16 DC 24 V

- DC 24 V — Nominal voltage
- 16 — Contacts
- HK 3087N. — Type

Connection Example for HK 3087N.16

Relay: OA 5602.48 ≙ 1 NO contact and 1 NO contact (standard)

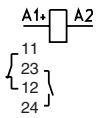

Contact	Contact-type	Connection
1	NC contact	11, 12
2	NO contact	23, 24

The terminal assignment is according to the diagram on the installed relay

Characteristic (NC contact)

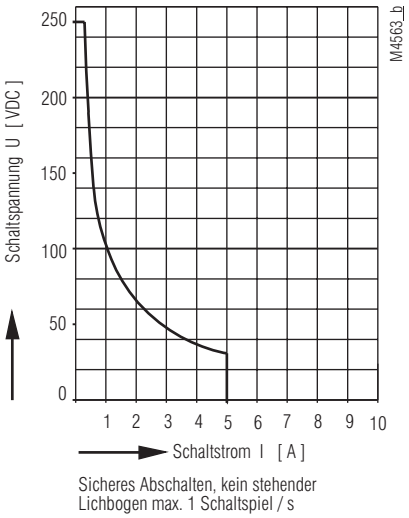

Arc limit curve under resistive load

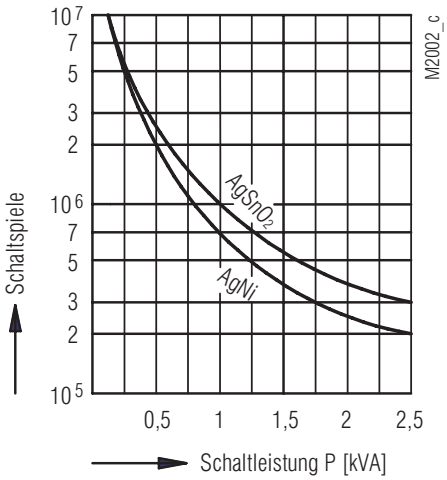

Contact service life
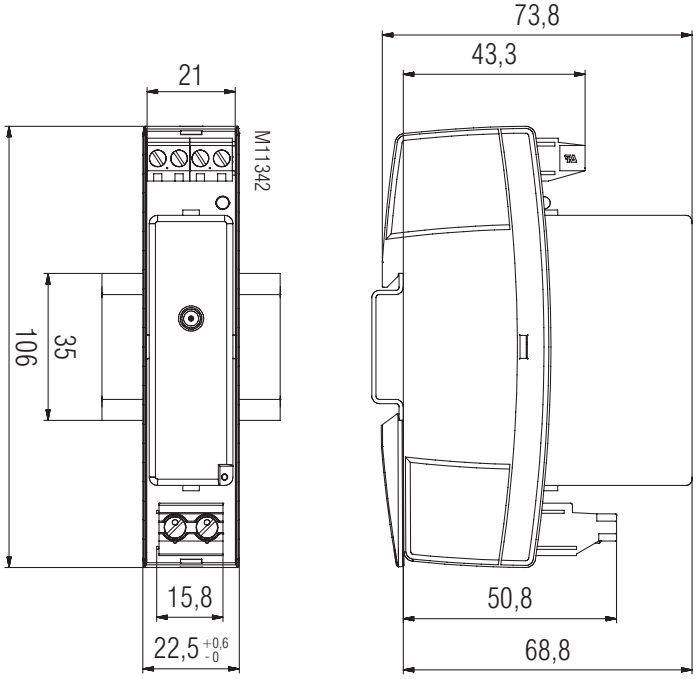
Dimension